SPICE SETUP (for Windows) and CIRCUIT EXAMPLES

Open a new file: **New -> New Mixed (Xspice) Circuit**.

<u>Devices to use from the **Device** menu:</u>

Voltage Source

Voltmeter

Capacitor

Resistor (simple)

Ground (note: all circuits must have a ground to run the simulation)

Diode

BipolarTransistor -> Small Signal NPN

<u>Devices to use from the **More Devices** menu:</u>

Op Amp (3 pin)

Transformer

<u>Circuit Drawing</u>

Lines (wires): click to turn a corner, double click to end.

Rotate: CONTROL-R

Flip: Edit Menu -> rotate or Flip Part

Copy: CONTROL-C

Paste: CONTROL-V

Multiple selection: SHIFT-click

To edit device values: double click on the component (not the value).

CIRCUIT EXAMPLES

12V PSU

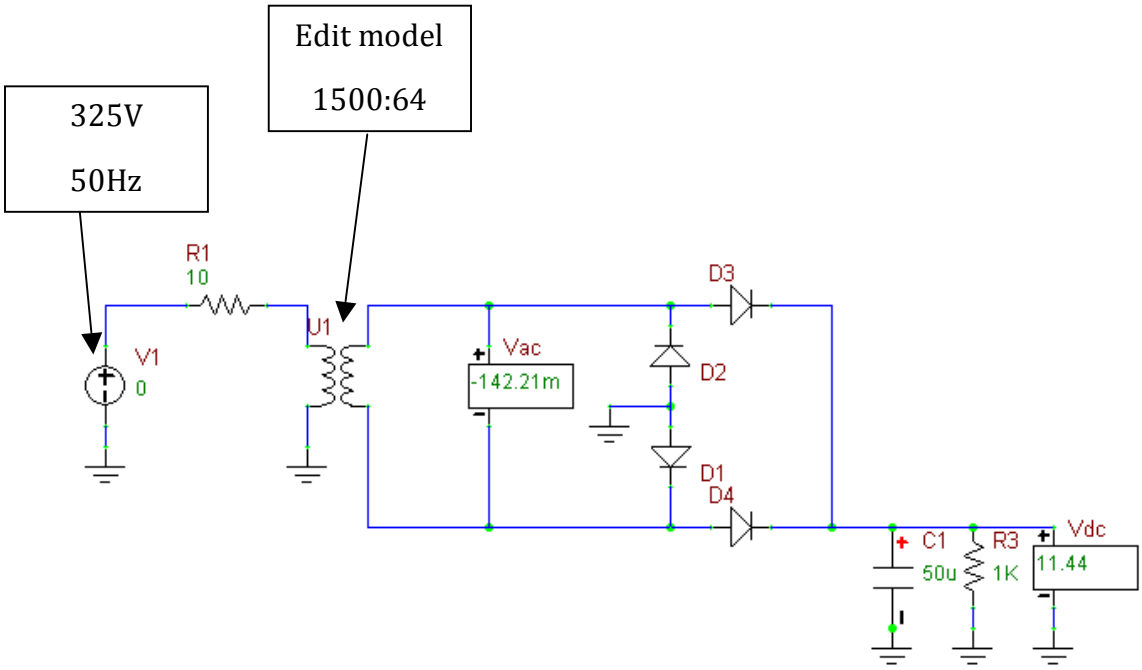

<u>Simulation Setup:</u>

Transient

Setup: Stoptime 100m

Lin step 100µ

Step Ceiling 100µ

☒ Use initial conditions (yes)

☒ Display Graph

ACTIVE DI

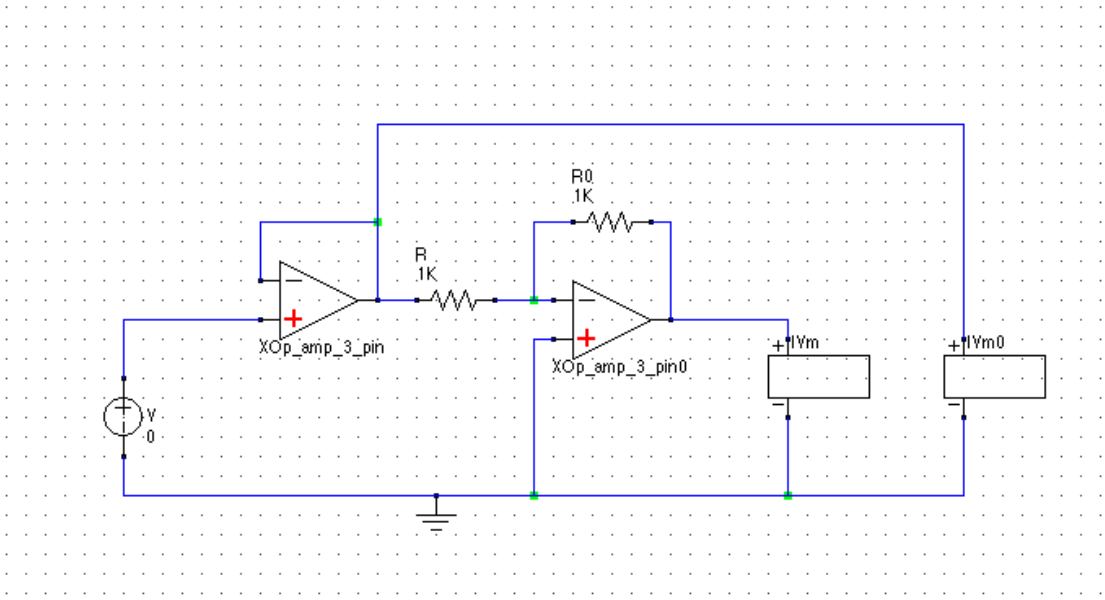

BALANCED
INPUT

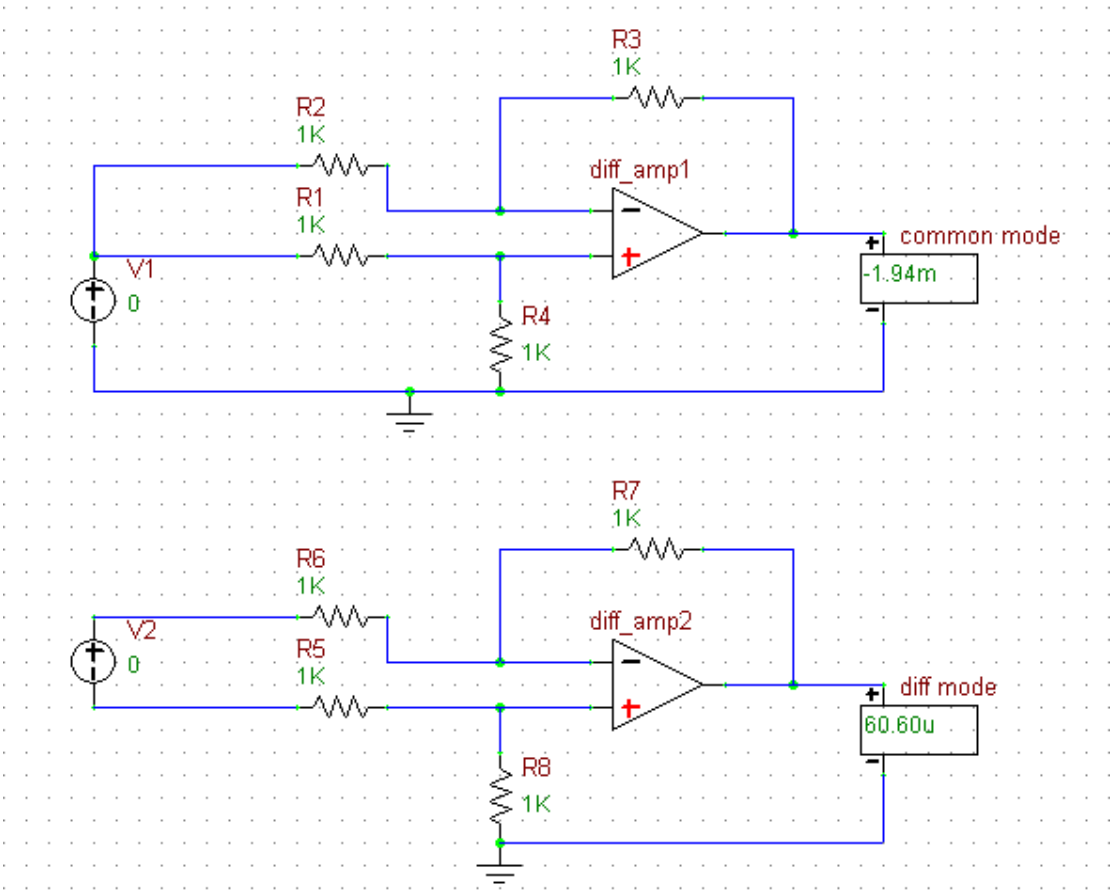

Simulation Setup:

Transient

Setup: Stoptime 2m

Lin step 1µ

Step Ceiling 10µ

☐ Use initial conditions (no)

C.E. AMPLIFIER

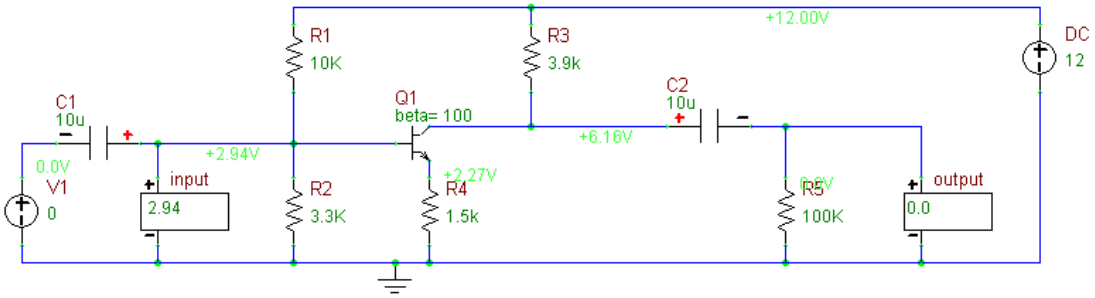

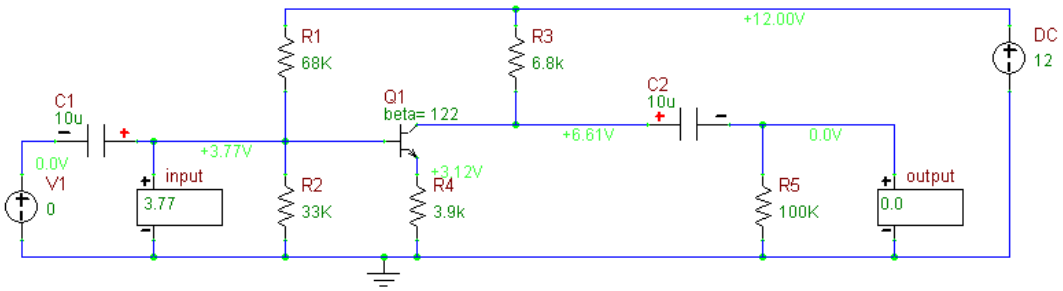

Simulation Setup:

OP (Operating Point): ☒ Show Voltage Text

Transient

Setup: Stoptime 4m

Lin step 1µ

Step Ceiling 10µ

☐ Use initial conditions

PASSIVE CROSSOVER

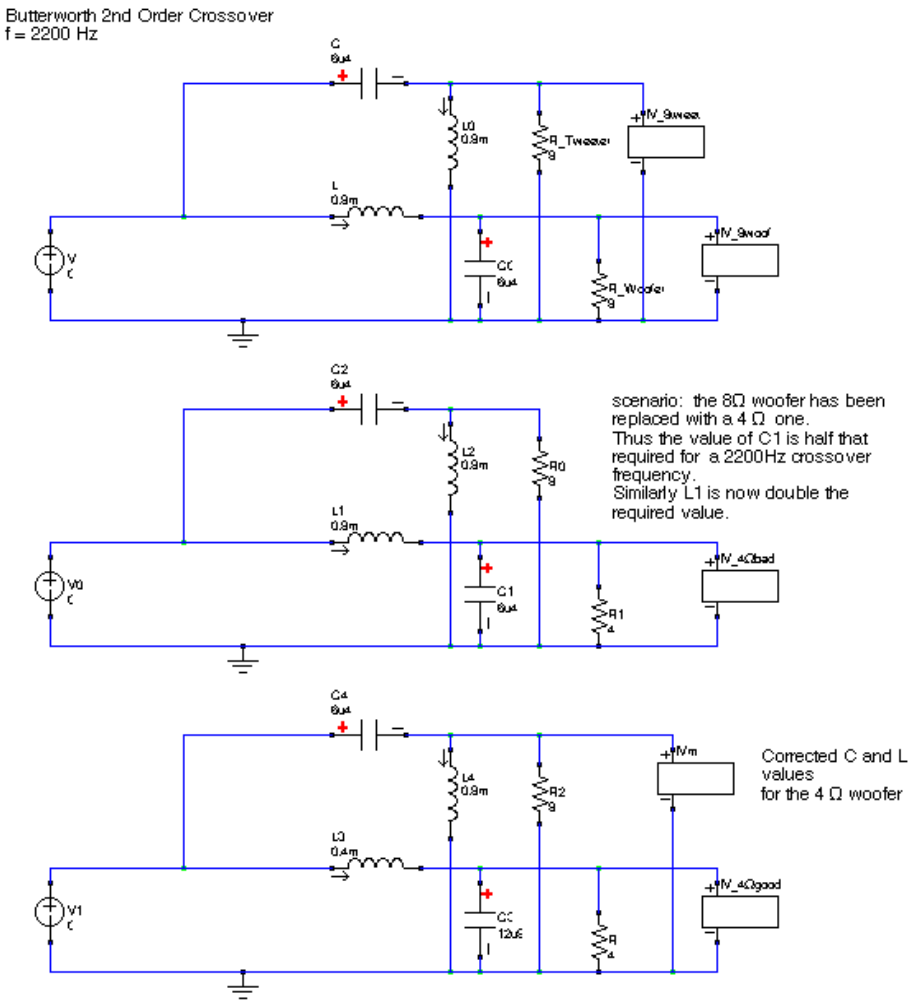

<u>Simulation Setup:</u>

AC (AC Frequency Sweep)

Setup:

Start 20

Stop 8K

Number of steps/interval 20

Stepping Interval Decade

ACTIVE CROSSOVER

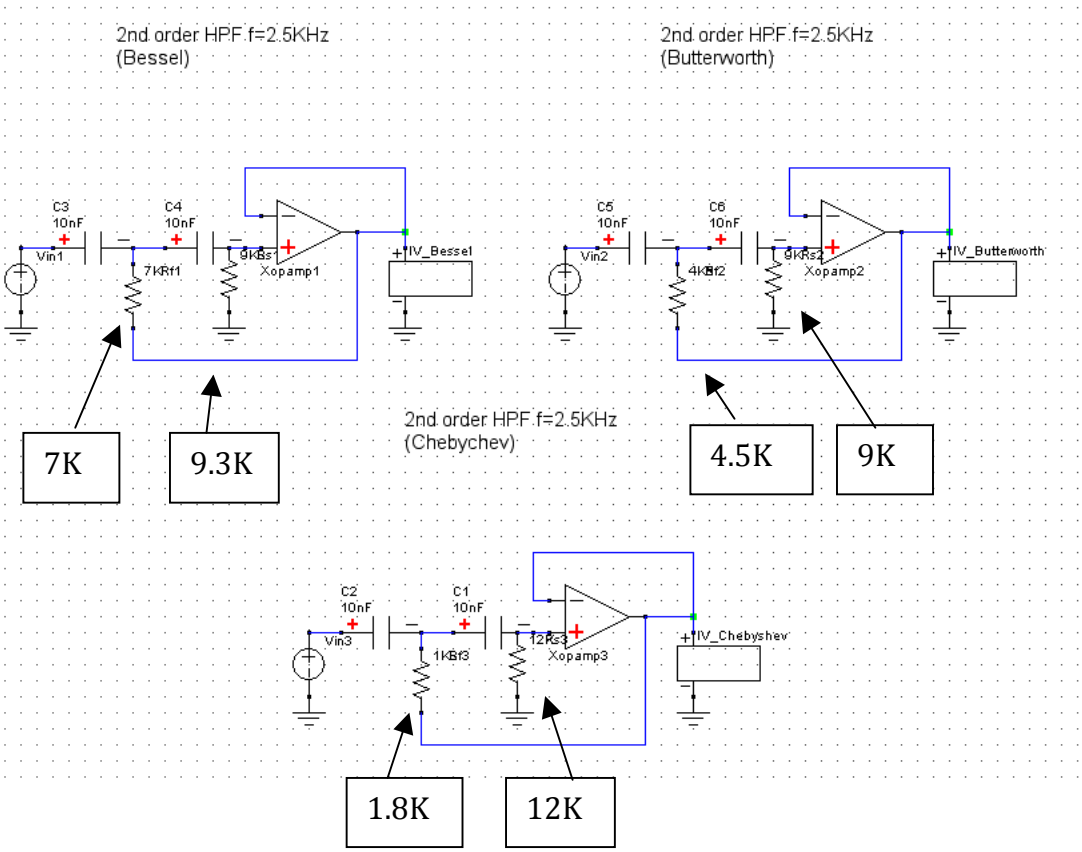

D TO A CONVERTER

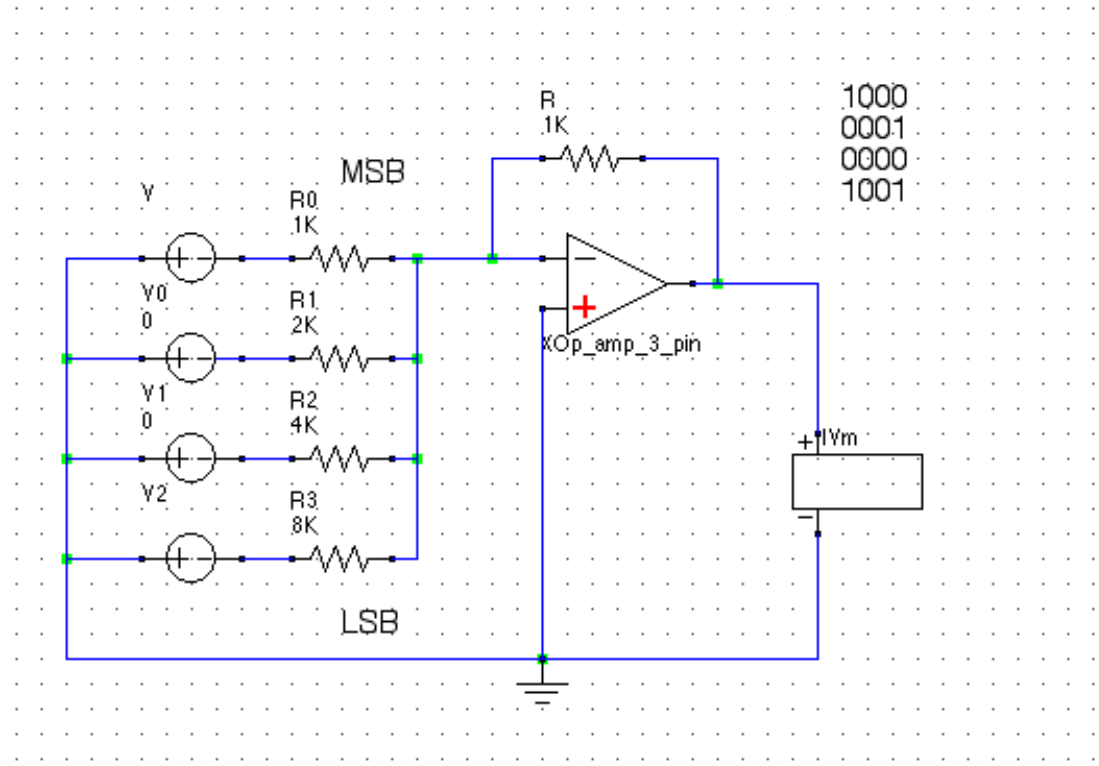

<u>Simulation Setup:</u>

Transient

Setup: Stoptime 1m

Lin step 10µ

Step Ceiling 10µ

☐ Use initial conditions